MCON Products Inc.
2150 Richardson Side Road
Carp, ON K0A 1L0
Tel: 1-800-267-5515
Email: SalesCarp@mconproducts.com

MCON Pipe & Products Inc.
2691 Greenfield Road
Ayr, ON N0B 1E0
Tel: 1-866-537-3338
Email: SalesAyr@mconproducts.com

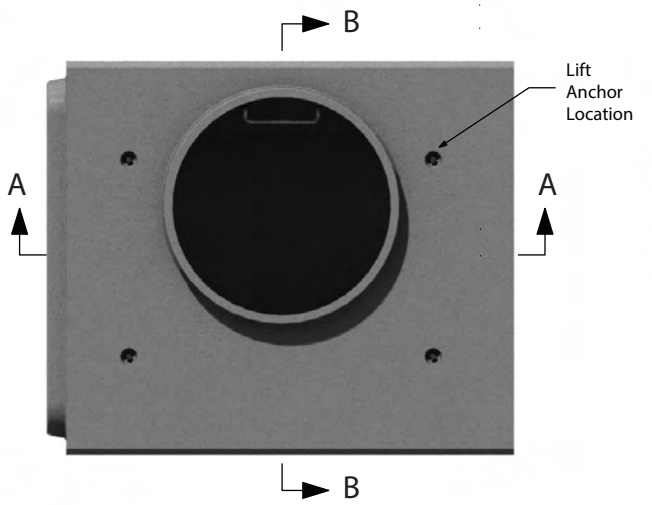

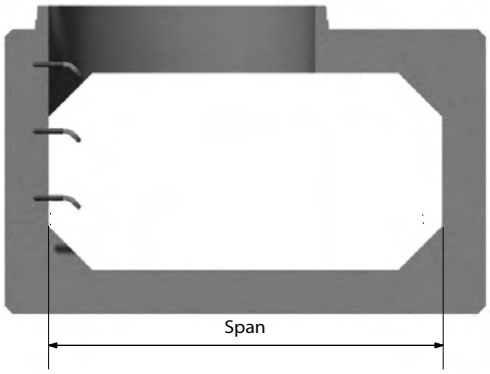

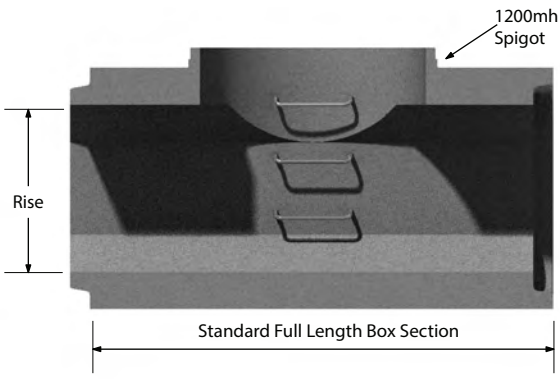

Carp Only

Box Section Maintenance Hole Tees
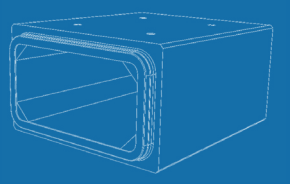
Notes
1. Manufactured in accordance with OPSS 1821 and CHBDC.
2. Maintenance holes steps as per OPSD 405.010.
3. Contact our engineering department for additional box bend information and angles not detailed.
4. Above dimensions are in millimeter unless otherwise shown.