M CON Products Inc.
2150 Richardson Side Road
Carp, ON K0A 1L0
Tel: 1-800-267-5515
Email: SalesCarp@mconproducts.com

M CON Pipe & Products Inc.
2691 Greenfield Road
Ayr, ON N0B 1E0
Tel: 1-866-537-3338
Email: SalesAyr@mconproducts.com

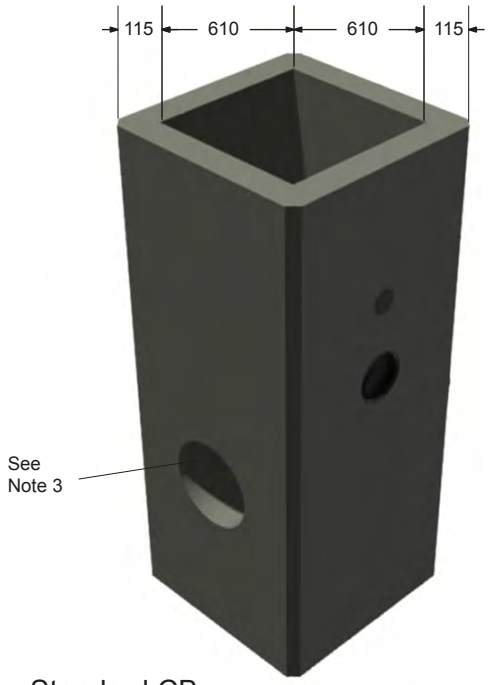

Standard CB

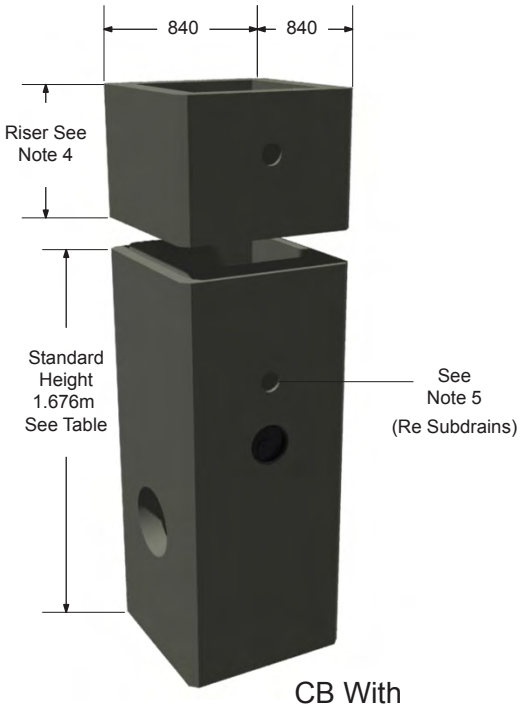

CB With
Riser Section

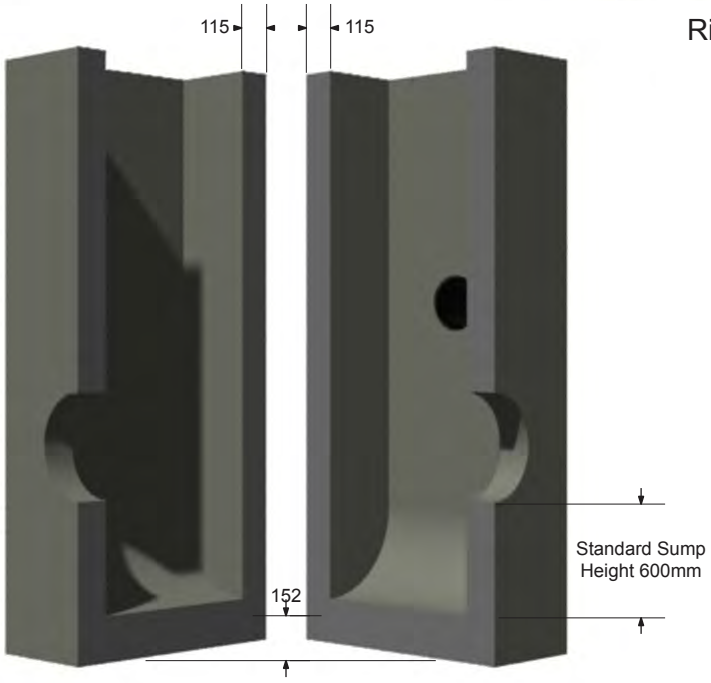

Alternate Standard Heights (mm)	
A	1219
B	1372
C	1524
D	1829
E	1981

600x600mm Single Inlet Catch Basin

Notes
1. Manufactured in accordance with OPSD 705.010.
2. 150mm wall available upon request.
3. Standard opening size - 350mm diameter.
4. Riser sections available - 305, 457, 610, 914, and 1219mm
5. Subdrain connection insert for 100, 125, and 150mm diameter standard on all stock catch basins.
6. GOSS traps available upon request.