M CON Products Inc.
2150 Richardson Side Road
Carp, ON K0A 1L0
Tel: 1-800-267-5515
Email: SalesCarp@mconproducts.com

M CON Pipe & Products Inc.
2691 Greenfield Road
Ayr, ON N0B 1E0
Tel: 1-866-537-3338
Email: SalesAyr@mconproducts.com

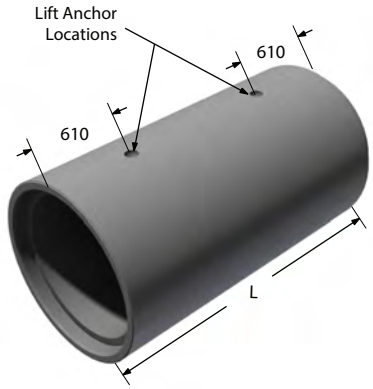

Available
Carp Only

Designated Internal Diameter (Nominal)	Actual Diameter (ID)	Outside Diameter (OD)	Wall Thickness (W)	Lay Length (L)	Waterway Area	Approximate Mass	Lift Anchor Size	Truckload Lots
mm	**mm**	**mm**	**mm**	**m**	**m²**	**kg/pc**	**ton**	**pcs**
975	991	1245	127	2.29	0.77	2567	4	12

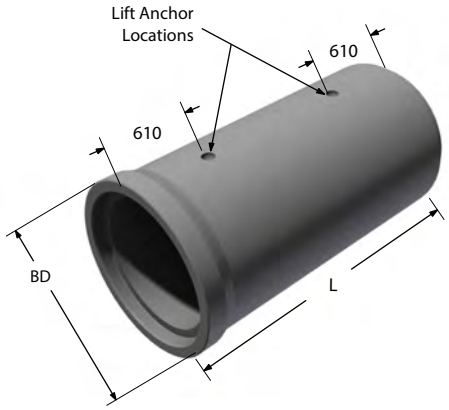

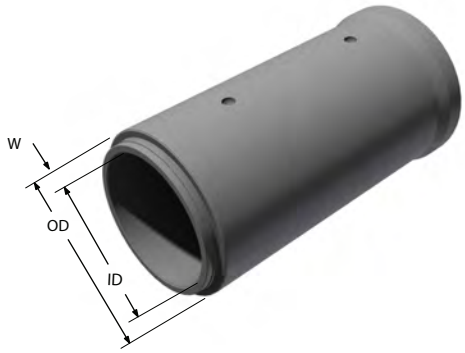

Available
Ayr Only

Designated Internal Diameter (Nominal)	Actual Diameter (ID)	Bell Diameter (BD)	Outside Diameter (OD)	Wall Thickness (W)	Lay Length (L)	Waterway Area	Approximate Mass	Lift Anchor Size	Truckload Lots
mm	**mm**	**mm**	**mm**	**mm**	**m**	**m²**	**kg/pc**	**ton**	**pcs**
975	991	1318	1245	127	2.44	0.77	2818	4	12

Mass and Dimension
975mm pipe

Notes
1. Manufactured in accordance with CSA-A257.2.
2. All standard reinforced concrete pipe classes available: 50-D, 65-D, 100-D and 140-D.
3. Contact our engineering department for special design concrete pipe applications.
4. All pipe joints come complete with pre-lubricated rubber gaskets.